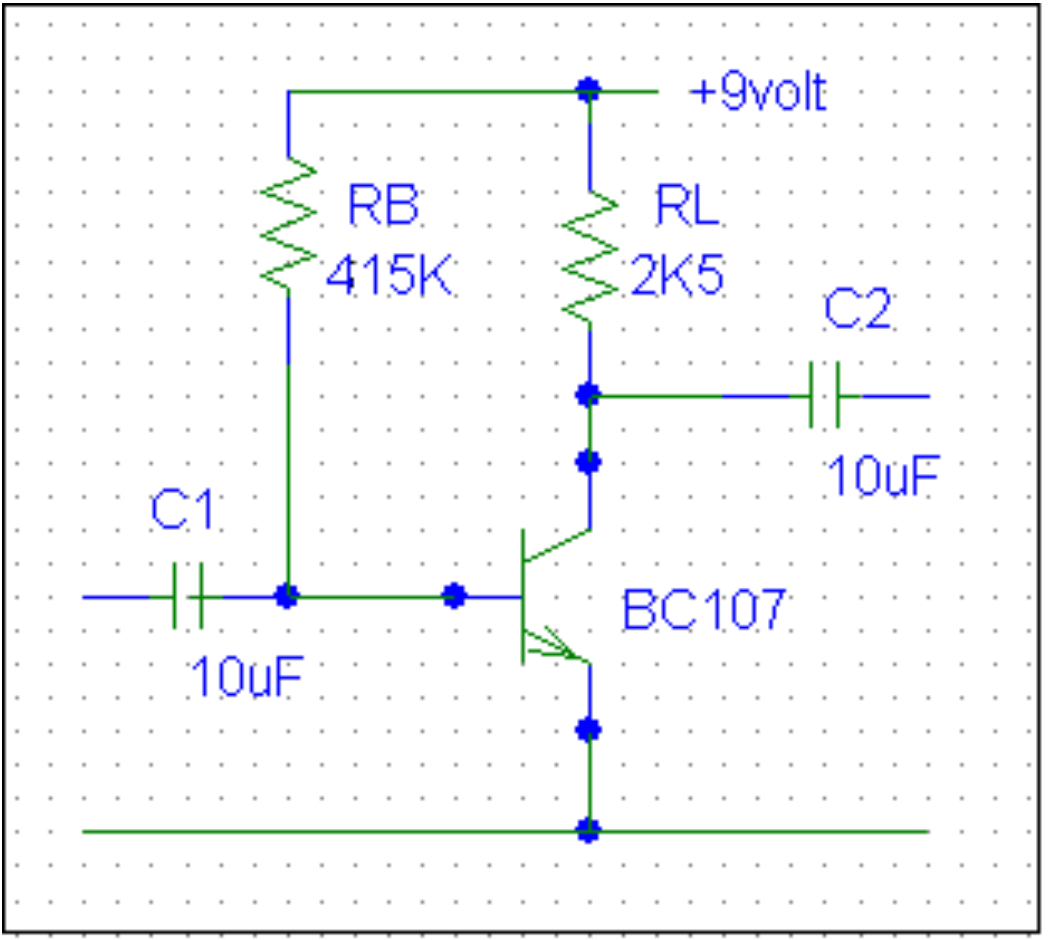
+9volt
RB
415K
RL
2K5
C2
10uF
C1
10uF
BC107