UiO : Department of Informatics
University of Oslo

INF9442 – Image Sensor Circuits and Systems

Lecture 9 – Advanced signal/noise model

17-November-2014

Project Milestones and Deliverables

Task/milestone	Start	Finish
Decide topic and high level requirements	15.sep	22.sep
Create project plan (tasks, milestones, schedule)	22.sep	29.sep
MS1 - project plan approved by Johannes	29.sep	29.sep
Study literature on the topic	29.sep	06.okt
Design/simulation	06.okt	27.okt
Write up prelim report (incl references, design, results)	27.okt	03.nov
MS2 - submit prelim report to Johannes	03.nov	03.nov
Design/simulation	03.nov	17.nov
Write up final report (incl references, design, results)	17.nov	24.nov
MS3 - submit final report to Johannes & 20min presentation	24.nov	24.nov

Agenda

- Motivation and lecture goals
- Definitions
- Stochastic signal theory
- Recap on noise sources
- S/N model in HDR sensors

Motivation and lecture goals

- Image quality is quantified in terms of S/N ratio (SNR)
- SNR models are used to determine key design parameters such as pixel size and dynamic range
- Learn how to calculate S/N for linear response sensors and for high dynamic range sensors

Pixel output signal and noise sources

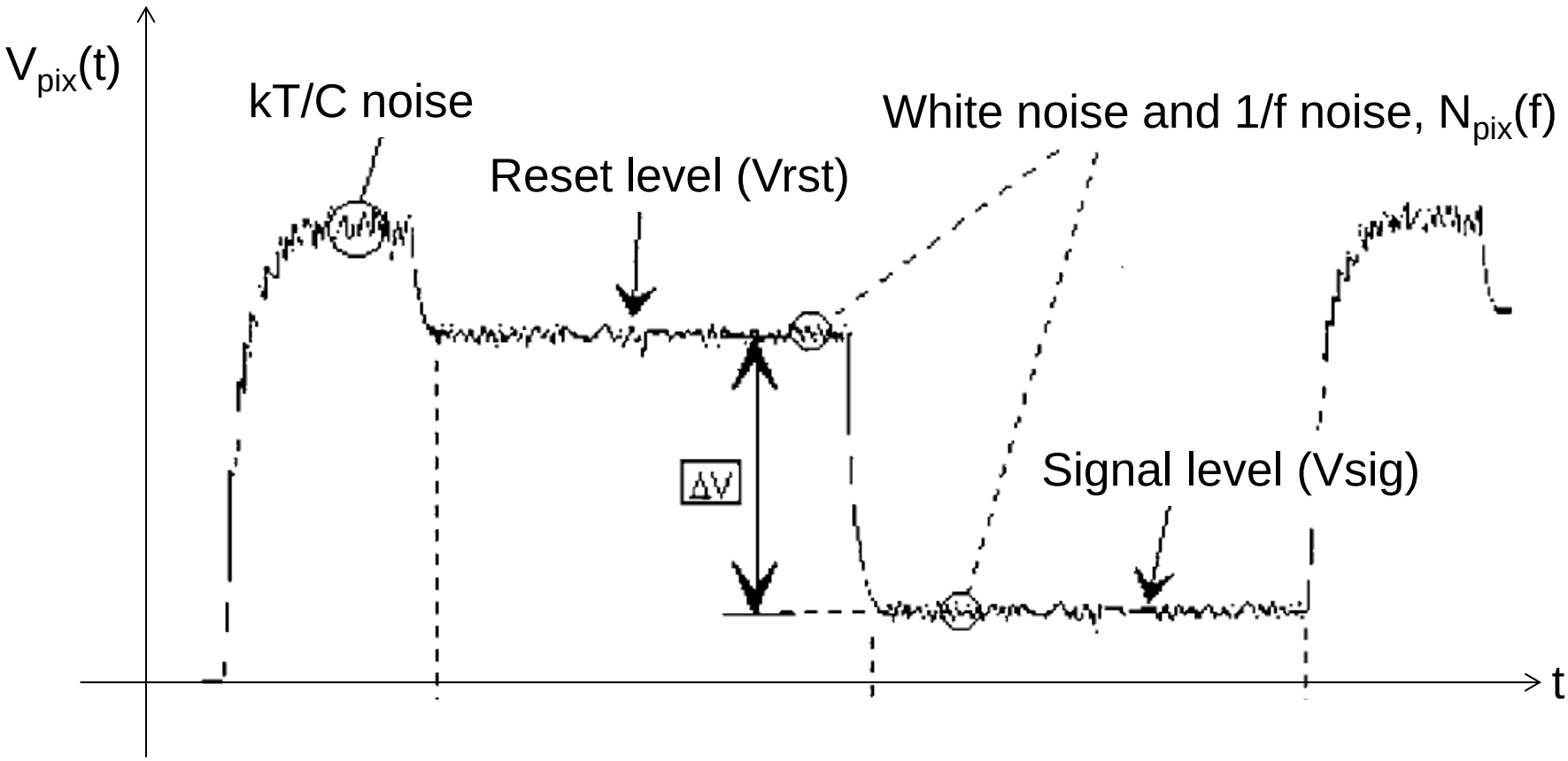

White noise and 1/f noise in transistors

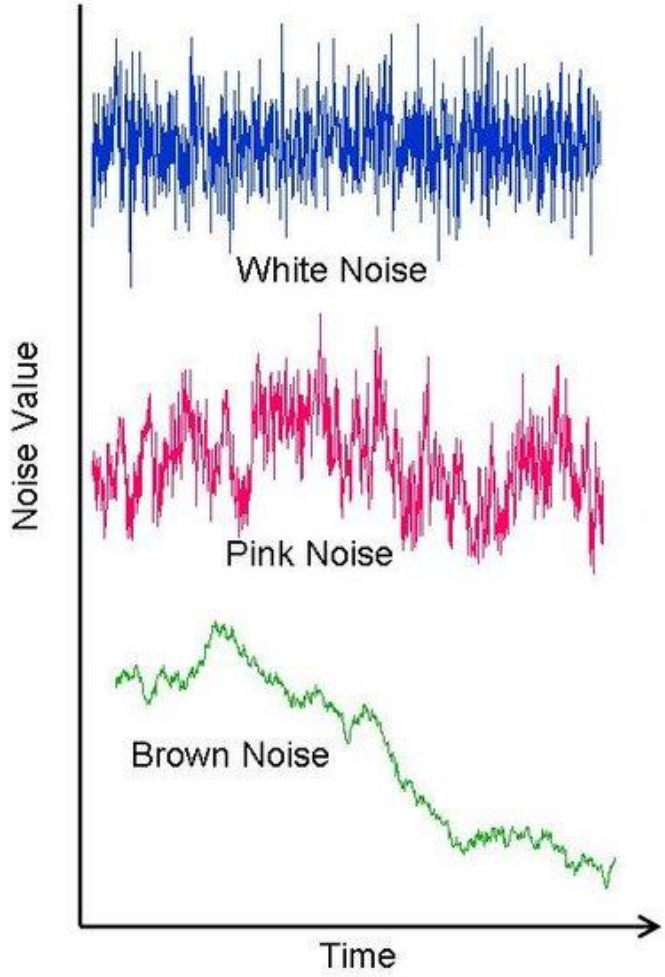

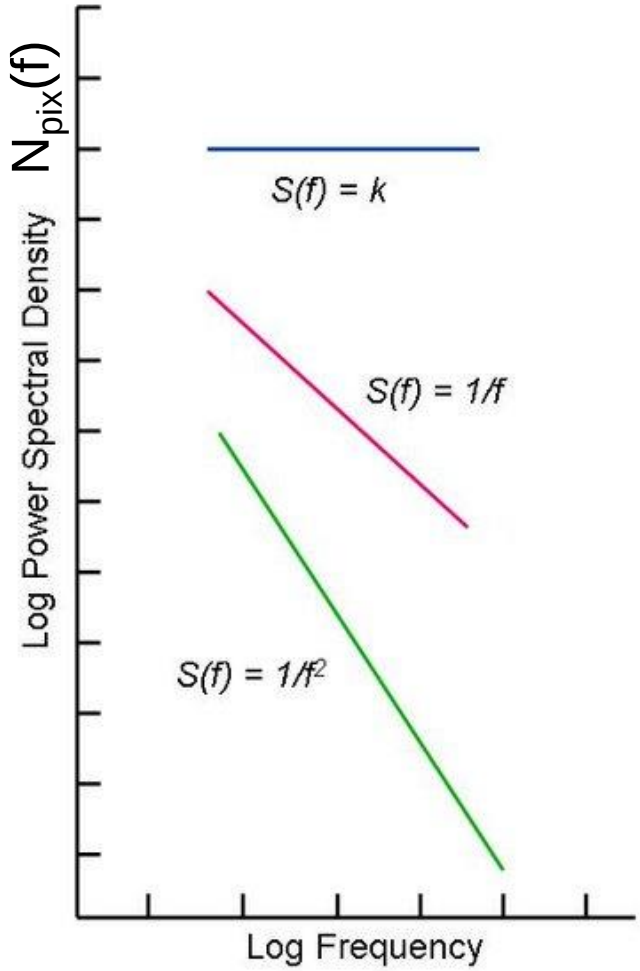

Noise spectral density at pixel output

- $N_{pix}(f) = k + b/f + c/f^2$ (V^2 / Hz)

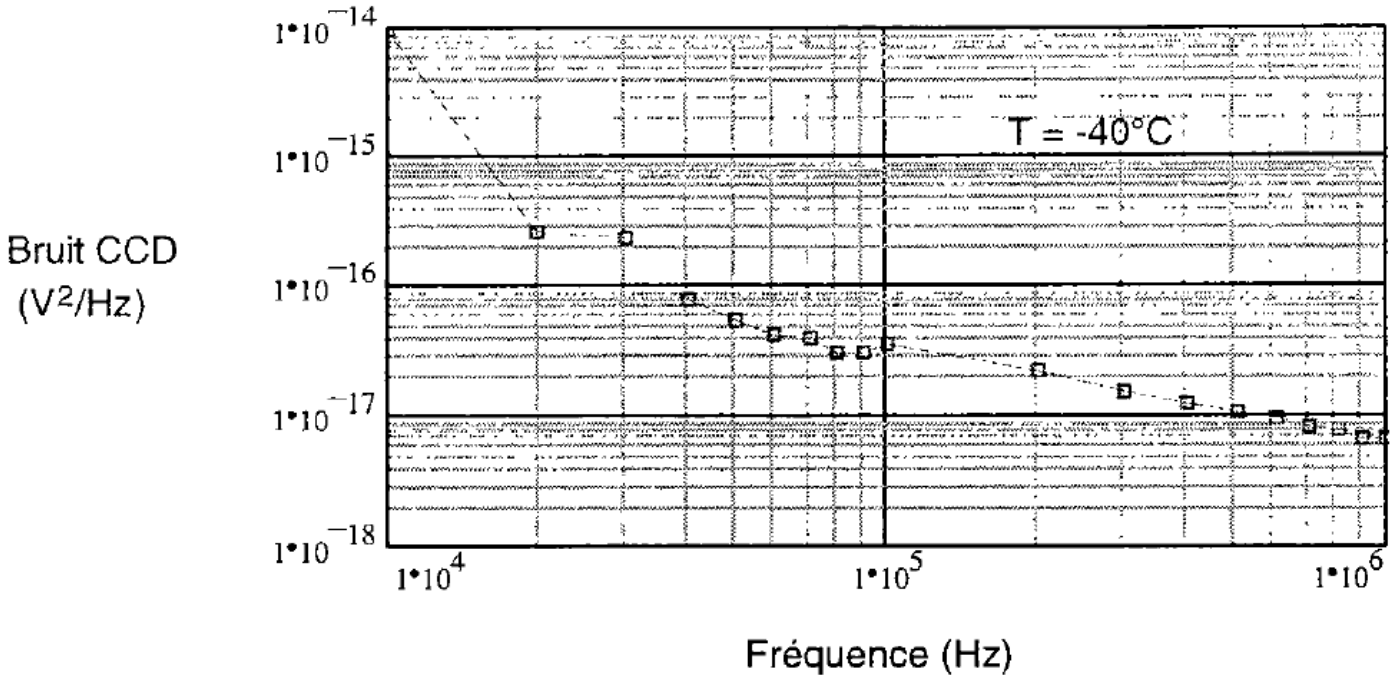

Figure 2.3 Densité spectrale du bruit mesuré à la sortie d'un capteur CCD à la température de -40°C (Thomson - 7895M).

Camera Output Signal-to-Noise Ratio

Signal/noise ratio: $S/N = \frac{\Delta V}{\sigma_{\Delta V}}$

ΔV = output value (volts or LSB)
$\sigma_{\Delta V}$ = standard deviation of ΔV (volts rms or LSBs rms)

S/N sometimes expressed in decibels (dB), in which case

$$S/N_{dB} = 20 \cdot \log\left(\frac{\Delta V}{\sigma_{\Delta V}}\right)$$

Signal definition

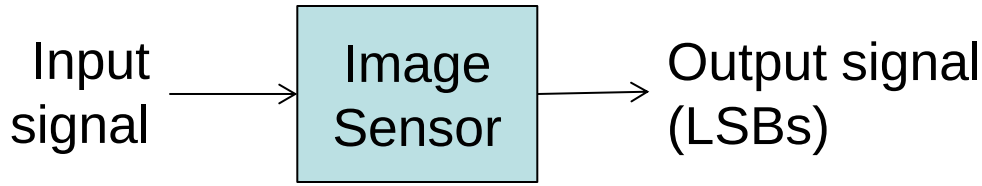

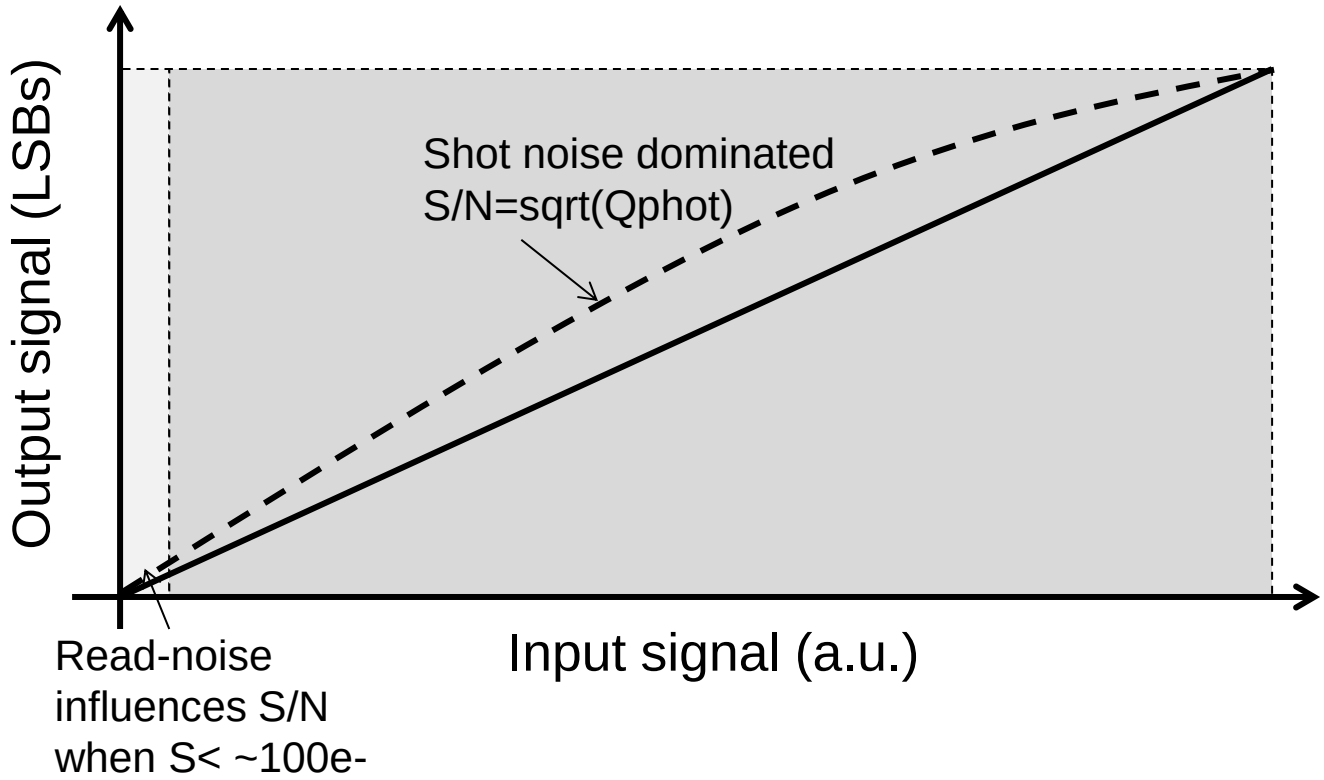

Variance and Standard Deviation

Let X= random signal with mean value μ

Noise level is often quantified by its variance or standard deviation value

$$Variance(X) = \sigma^2 = E\{(X-\mu)^2\}$$

$$\mathrm{StdDev}(X) = \sigma = \sqrt{E\{(X-\mu)^2\}}$$

Noise definition

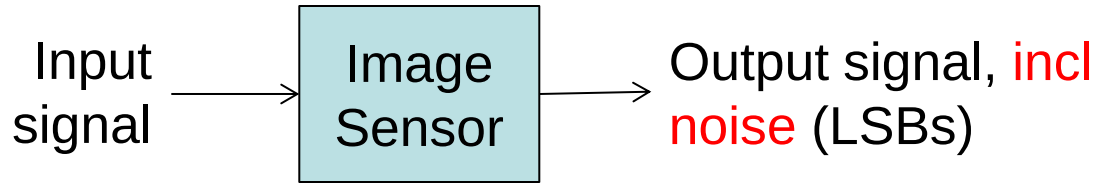

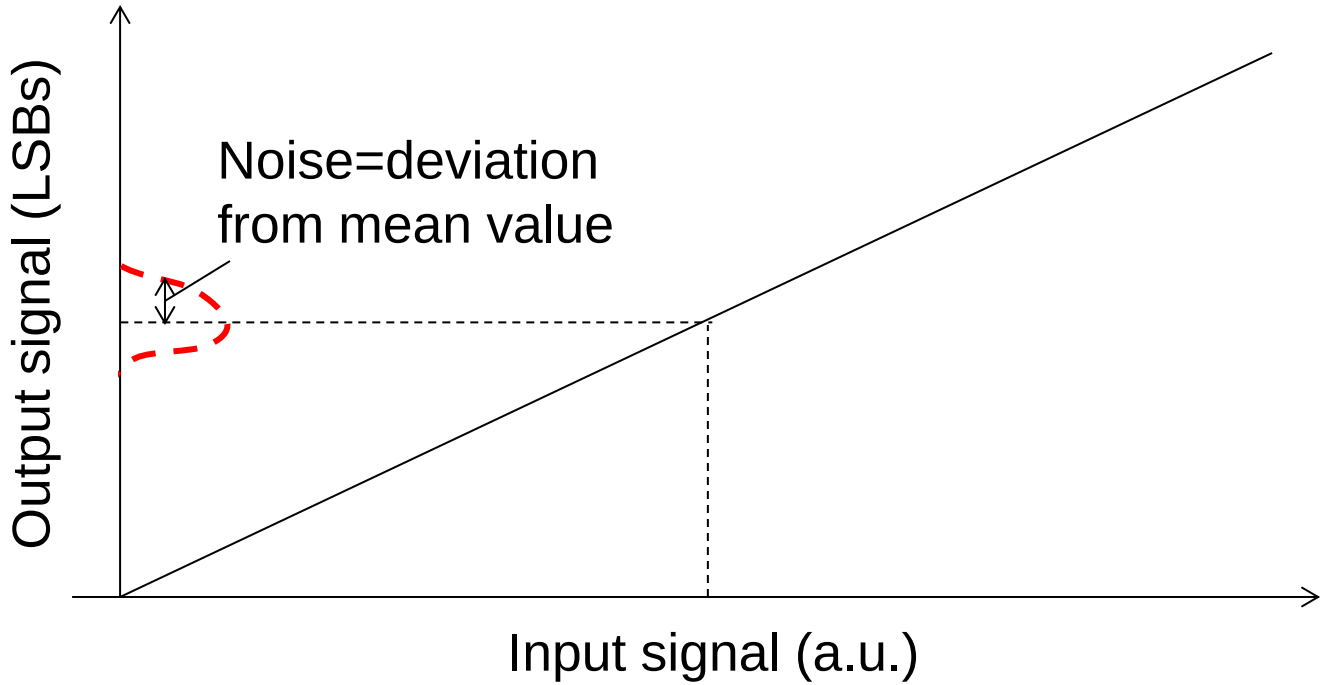

Temporal noise versus FPN

- Temporal noise means that the noise signal varies with time. In other words, the noise value changes randomly in every captured image.
  - Photon shot noise
  - Electronic circuit noise
  - Dark current noise
- Fixed pattern noise means that the noise value is the same in every capture, but it changes randomly from pixel to pixel accross the image
  - Photoresponse non-uniformity (PRNU)
  - Column FPN (vertical stripes)
  - Row-wise FPN (horizontal stripes)

Example of picture with random noise

Possible noise sources in this picture:

- Photon noise
- Dark current (DC)
- Electronic circuit noise (read noise)
- Photoresponse-non-uniformity (PRNU)

Fixed pattern noise (FPN)

Example of column FPN (vertical FPN)

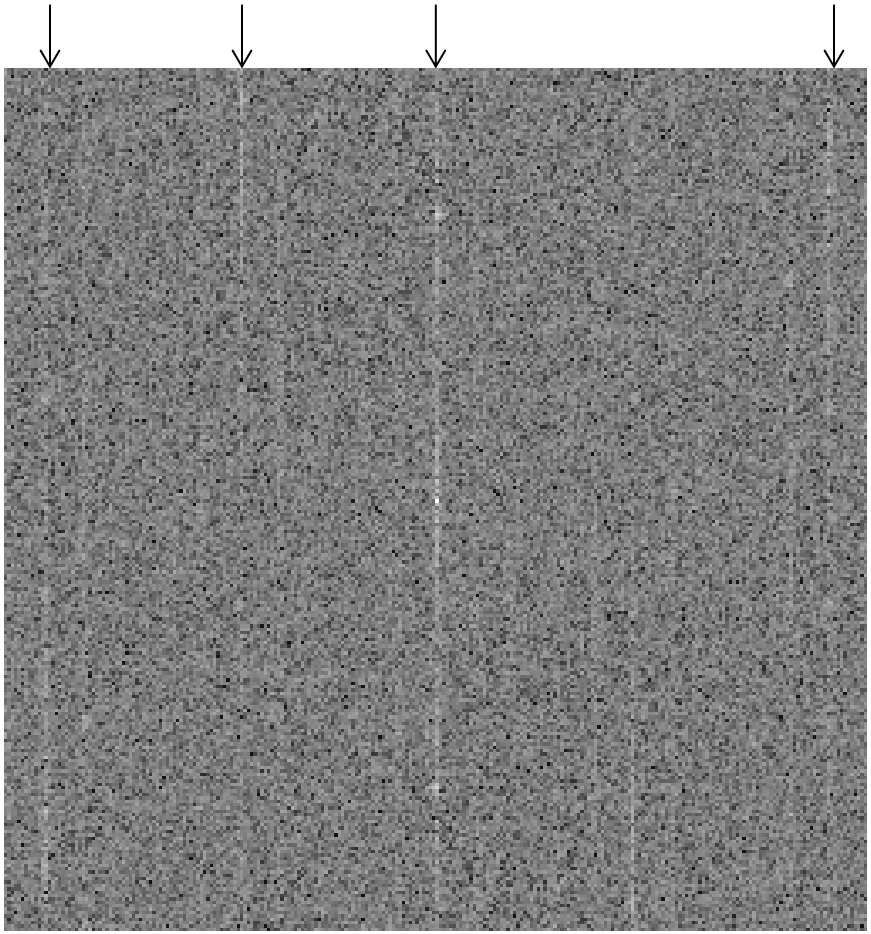

Calculating Signal/Noise Ratio

Method to calculate S/N in frequency domain using the following theorem:

$$\sigma^2 = \int_0^\infty N_{pix}(f) \cdot |H(f)|^2 \, df$$

σ^2 = output variance (LSB^2)
$N_{pix}(f)$ = spectral density of pixel output noise (V^2/Hz)
$H(f)$ = transfer function of correlated double-sampling circuitry (LSB/Volt)

Digital CDS

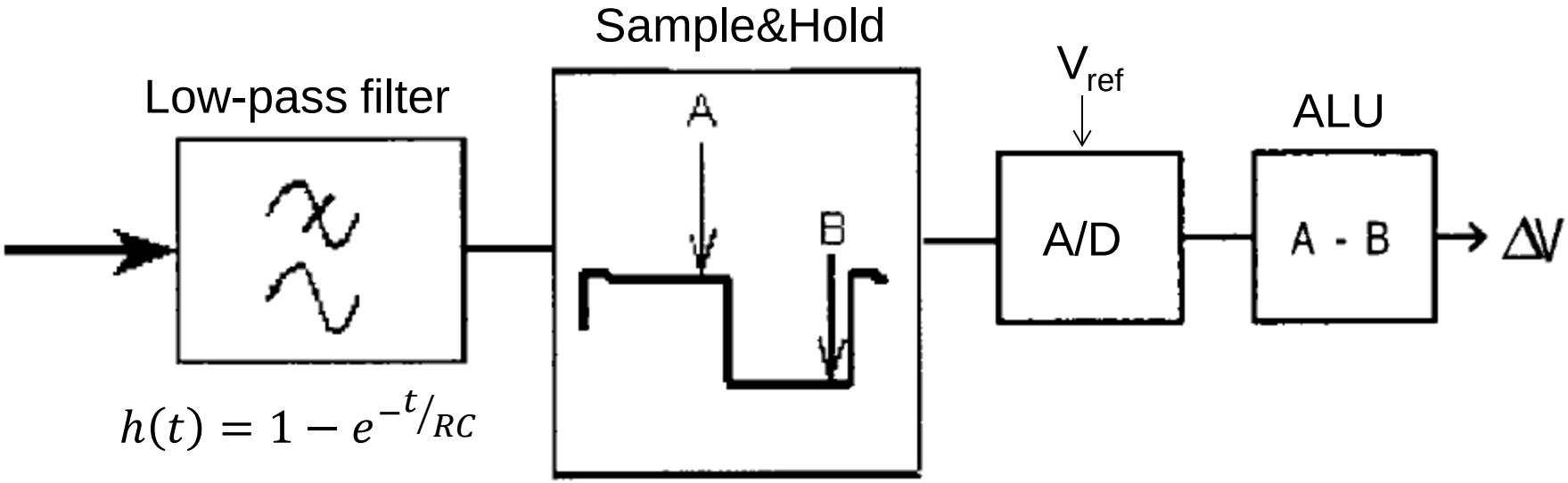

$$h(t) = 1 - e^{-t/RC}$$

$$h(t) = \frac{2^N - 1}{V_{ref}}\{\delta(t) - \delta(t - T_{CDS})\}$$

Digital CDS model

Input signal, $N_{pix}(f)$ (V^2/Hz) → Low-pass filter: $h(t) = 1 - e^{-t/RC}$ → A/D and digital CDS: $h(t) = \frac{2^N - 1}{V_{ref}}\{\delta(t) - \delta(t - T_{CDS})\}$ → Output, ΔV (LSBs)

h(t) = transfer function of digital CDS operation
$\delta(t)$ = delta-dirac function
N = number of ADC bits (typically 10b-12b)
V_{ref} = ADC reference voltage (typically 1V at 1x gain)
T_{CDS} = time interval between sampling of reset level and signal level

Output noise after digital CDS

$$\sigma^2 = \int_0^\infty \frac{V_{pix}(f)}{1+\left(\frac{f}{f_c}\right)^2} \cdot |H(f)|^2 \cdot df$$

σ^2 = output variance with unit LSB^2

$$h(t) = \delta(t) - \delta(t - T_{CDS})$$

$$H(j\omega) = 1 - e^{-j\omega T_{CDS}}$$

$$\omega = 2 \cdot \pi \cdot f$$

$$|H(j\omega)|^2 = H(j\omega) \cdot H(-j\omega)$$
$$= (1 - e^{-j\omega T_{CDS}}) \cdot (1 - e^{+j\omega T_{CDS}})$$

$$|H(j\omega)|^2 = 2 - 2 \cdot \cos(\omega T_{CDS}) = 4 \cdot sin^2(\frac{\omega T_{CDS}}{2})$$

Example of digital CDS transfer function

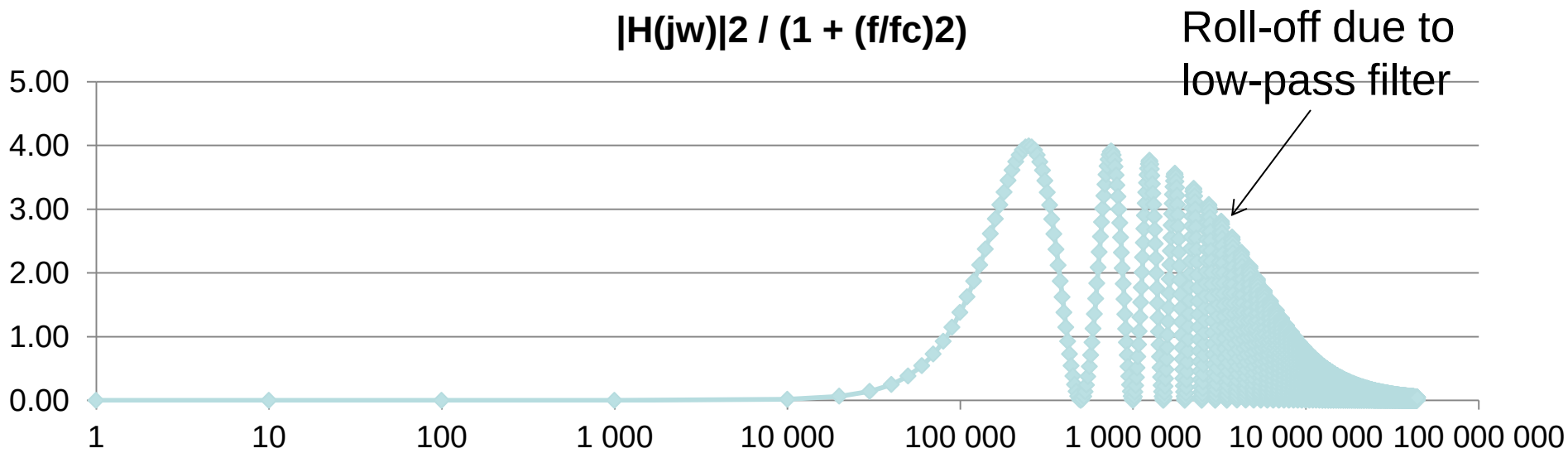

T_{CDS} = 2usec
f_c = 5MHz

Correlated Multi-Sampling (CMS)

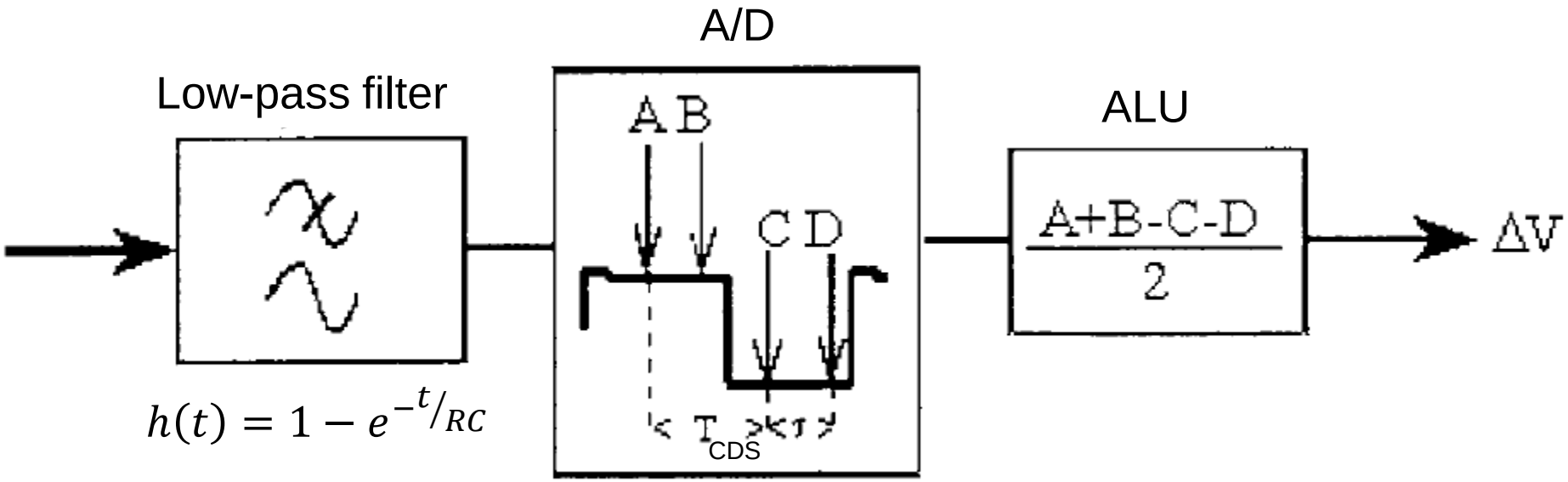

$$h(t) = 1 - e^{-t/RC}$$

$$h(t) = \frac{2^N - 1}{V_{ref}}\{\delta(t) + \delta(t-\tau) - \delta(t - T_{CDS}) - \delta(t - \tau - T_{CDS})\}/2$$

CMS S/N model

$$h(t) = \frac{2^N-1}{V_{ref}}\{\delta(t) + \delta(t-\tau) - \delta(t-T_{CDS}) - \delta(t-\tau-T_{CDS})\}/2$$

$$H(j\omega) = \frac{2^N-1}{2\cdot V_{ref}}\left(1 + e^{-j\omega\tau} - e^{-j\omega T_{CDS}} - e^{-j\omega(\tau+T_{CDS})}\right)$$

$$|H(j\omega)|^2 = \frac{2^N-1}{2\cdot V_{ref}}\{1 + \cos(\omega\tau) - \cos(\omega T_{CDS}) - \frac{1}{2}\cdot cos\big(\omega(T_{CDS}-\tau)\big) - \frac{1}{2}\cdot cos\big(\omega(T_{CDS}+\tau)\big)\}$$

$$\sigma^2 = \int_0^\infty \frac{N_{pix}(f)}{1+\left(\frac{f}{f_c}\right)^2}\cdot |H(f)|^2 \cdot df$$

(LSB^2)